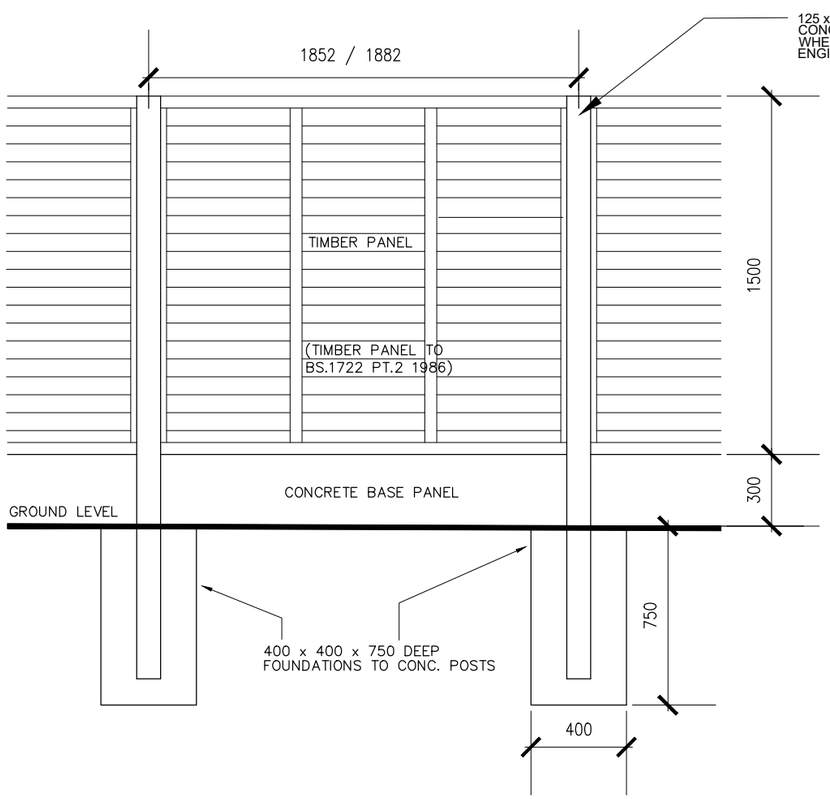

ELEVATION – Timber Panel

Scale 1:25

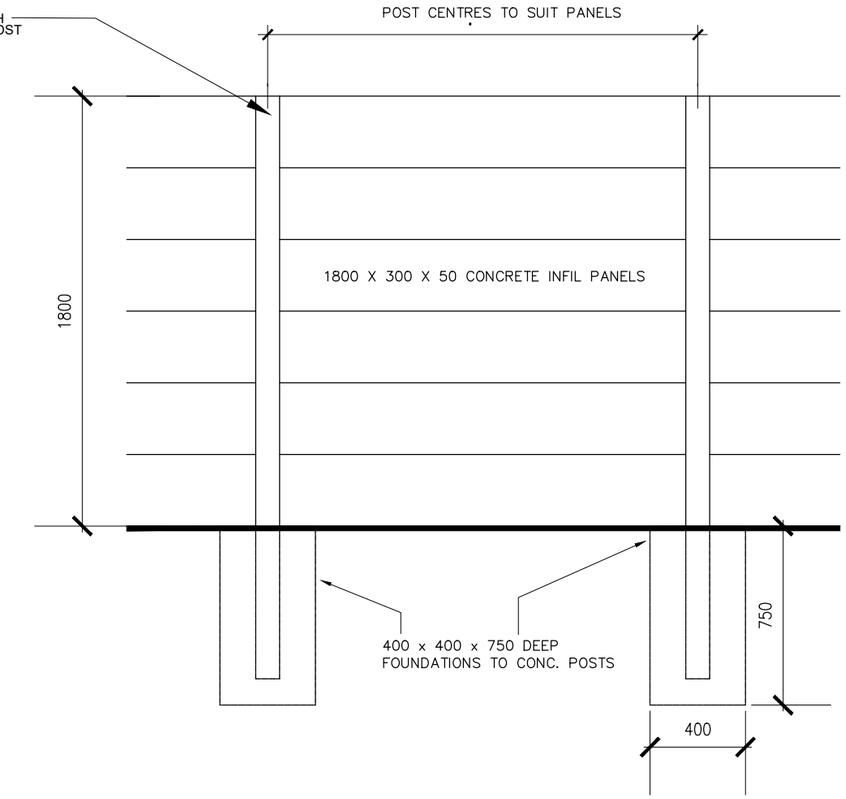

ELEVATION – Concrete Panel

Scale 1:25

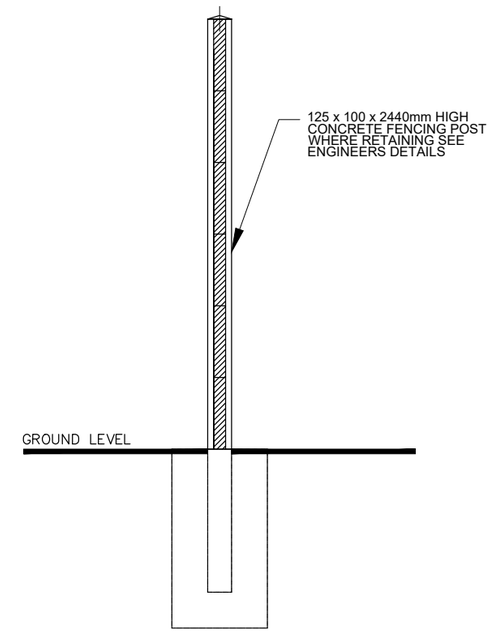

SECTION

Scale 1:25

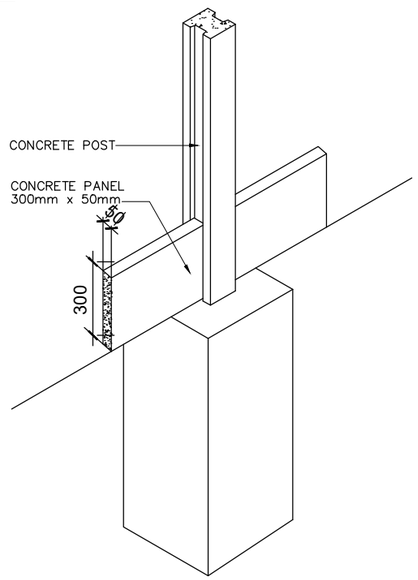

ISOMETRIC VIEW OF POST AND CONCRETE PANEL JUNCTION

Comhairle Contae Fhine Gall
Fingal County Council
ARCHITECTS DEPARTMENT
FINGAL COUNTY HALL, MAIN ST., SWORDS, Co. DUBLIN
Tel: (01)890 5050, Fax:- (01) 890 5079
COUNTY ARCHITECT:
FIONNUALA MAY Dip.Arch., B.Arch. Sc., M.U.B.C., M.R.I.A.I.

No.	DATE	REVISION

SCALE:-	1:25 @ A3
DATE:-	November 2025
DRAWN:-	C. Campion

PROJECT TITLE: Response & General Maintenance West & South County

DRAWING TITLE: Post and Panel Fencing Details

SENIOR ARCHITECT:

PROJECT TECHNICIAN: E. Larkin

DRAWING. NO: 26-002-T8002

REV.